AstroSemi™

Incredible Power for Small Body

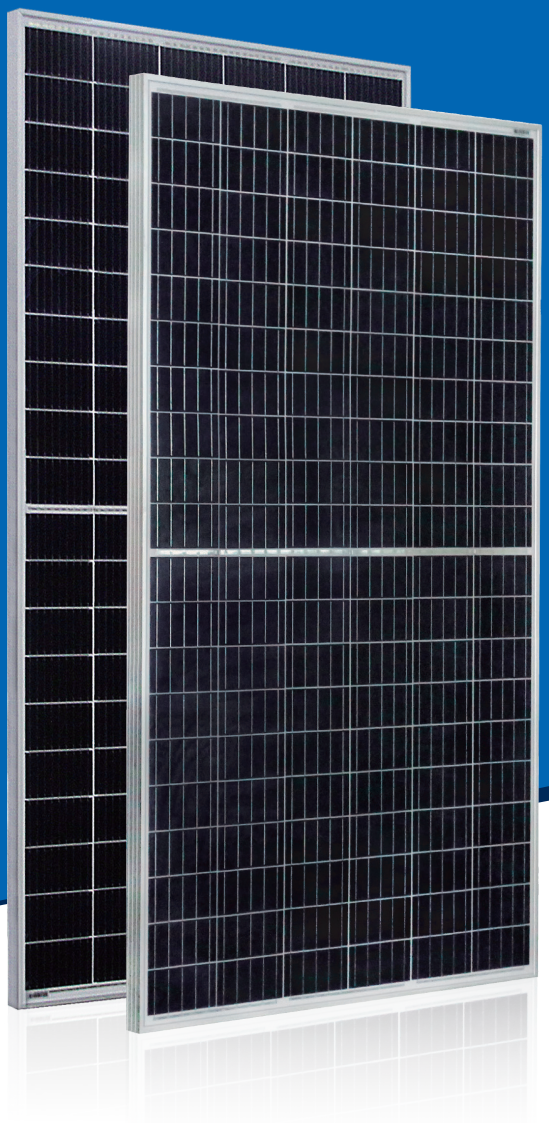

Multi-Busbar Module could be the option

285W~305W

Polycrystalline PV Module

CHSM60P-HC Series

Tier 1 Bloomberg | No.1 PHOTON | Underwritten by International Insurer | DNV GL 2018 TOP Performance

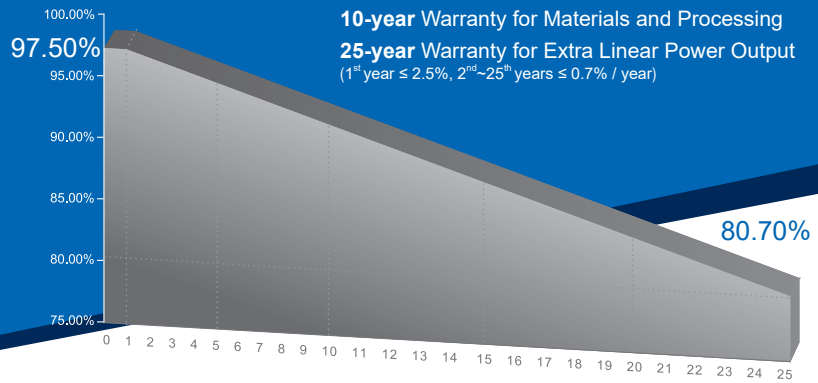

10-year Warranty for Materials and Processing

25-year Warranty for Extra Linear Power Output

(1st year ≤ 2.5%, 2nd~25th years ≤ 0.7% / year)

COMPREHENSIVE CERTIFICATES

First solar company which passed the TUV Nord IEC/TS 62941 certification audit.

KEY FEATURES

+5W OUTPUT POSITIVE TOLERANCE
Guaranteed 0~+5W positive tolerance ensures power output reliability.

INNOVATIONAL HALF-CELL TECHNOLOGY
Improves the module output, decreases the risk of mirco-crack, enhances the module reliability.

PERC INNOVATIVE PERC CELL TECHNOLOGY
Excellent cell efficiency and output.

REDUCE SHADOW LOSS
Effectively reduces the effect of shadow on the module surface.

REDUCE INTERNAL MISMATCH LOSS
Reduces mismatch loss and improves output.

PASSED HAIL TEST
Certified to hail resistence: ice ball size (d=45mm) and ice ball velocity (v=30.7m/s).

Anti PID PID RESISTANCE
Excellent PID resistance at 96 hours (@85℃ /85%) test, and also can be improved to meet higher standards for the particularly harsh environment.

ASTRONERGY
A CHINT COMPANY

For Global Market

ELECTRICAL SPECIFICATIONS

STC rated output (P_{mpp})*	285 Wp	290 Wp	295 Wp	300 Wp	305 Wp
Rated voltage (V_{mpp}) at STC	32.12 V	32.34 V	32.56 V	32.78 V	33.00 V
Rated current (I_{mpp}) at STC	8.87 A	8.97 A	9.06 A	9.16 A	9.26 A
Open circuit voltage (V_{oc}) at STC	38.65 V	38.90 V	39.14 V	39.39 V	39.63 V
Short circuit current (I_{sc}) at STC	9.34 A	9.43 A	9.52 A	9.60 A	9.68 A
Module efficiency	17.2%	17.5%	17.8%	18.2%	18.5%
Rated output (P_{mpp}) at NOCT	212.3 Wp	216.0 Wp	219.7 Wp	223.5 Wp	227.2 Wp
Rated voltage (V_{mpp}) at NOCT	29.83 V	30.02 V	30.23 V	30.41 V	30.59 V
Rated current (I_{mpp}) at NOCT	7.12 A	7.20 A	7.27 A	7.35 A	7.43 A
Open circuit voltage (V_{oc}) at NOCT	36.21 V	36.45 V	36.67 V	36.90 V	37.13 V
Short circuit current (I_{sc}) at NOCT	7.54 A	7.61 A	7.69 A	7.75 A	7.82 A
Temperature coefficient (P_{mpp})	- 0.3550%/°C				
Temperature coefficient (I_{sc})	+0.0415%/°C				
Temperature coefficient (V_{oc})	- 0.2729%/°C				
Normal operating cell temperature (NOCT)	44 ±2°C				
Maximum system voltage (IEC/UL)	1500V_{DC}				
Number of diodes	3				
Junction box IP rating	IP 67				
Maximum series fuse rating	15 A(≤300W), 20 A(≥305W)				

* Measurement tolerance +/- 3%

STC: Irradiance 1000W/m^2, Cell Temperature 25°C, AM=1.5
NOCT: Irradiance 800W/m^2, Ambient Temperature 20°C, AM=1.5, Wind Speed 1m/s

CURVE

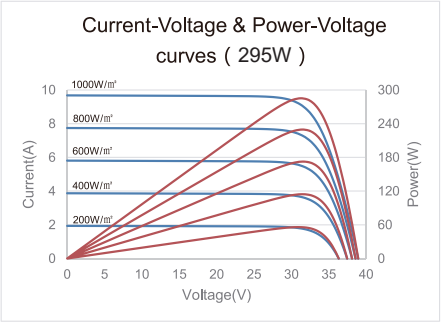

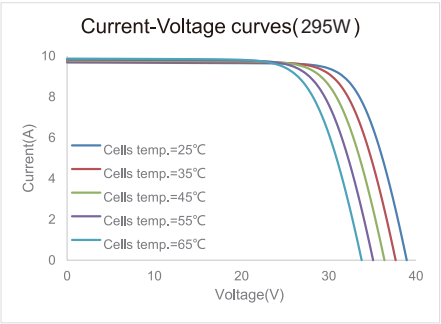

MECHANICAL SPECIFICATIONS

Outer dimensions (L x W x H)	1666 x 992 x 35 mm 65.59 x 39.06 x 1.38 in
Frame technology	Aluminum, silver anodized
Module composition	Glass / EVA / Backsheet (white)
Front glass thickness	3.2 mm / 0.13 in
Cable length (IEC/UL)	Portrait: 700 mm (27.56 in) Landscape: 1000 mm (39.37 in)
Cable diameter (IEC/UL)	4 mm² / 12 AWG
① Maximum mechanical test load	6000 Pa (front) / 3600 Pa (back)
Fire performance (IEC/UL)	Class C (IEC) or Type 1 (UL)
Connector type (IEC/UL)	MC4 compatible

① Refer to Astronergy crystalline installation manual or contact technical department.
Maximum Mechanical Test Load=1.5×Maximum Mechanical Design Load.

PACKING SPECIFICATIONS

① Weight (module only)	18.6 kg / 41.01 lbs
② Packing unit	31 pcs / box
Weight of packing unit (for 40'HQ container)	616 kg / 1358 lbs
Number of modules per 40'HQ container	868 pcs

① Tolerance +/- 1.0kg
② Subject to sales contract

MODULE DIMENSION DETAILS

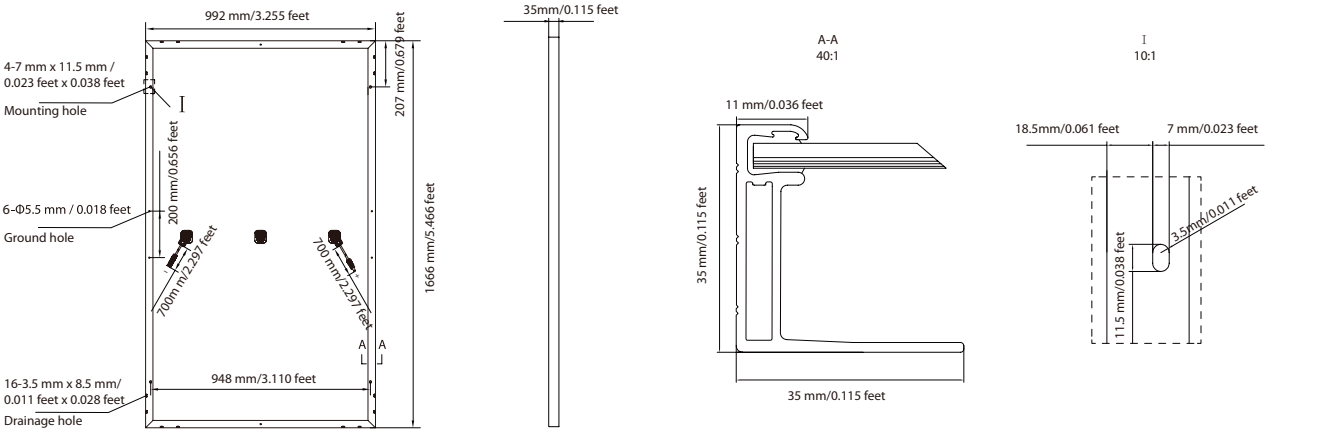

© Chint Solar (Zhejiang) Co., Ltd. Reserves the right of final interpretation. please contact our company to use the latest version for contract.